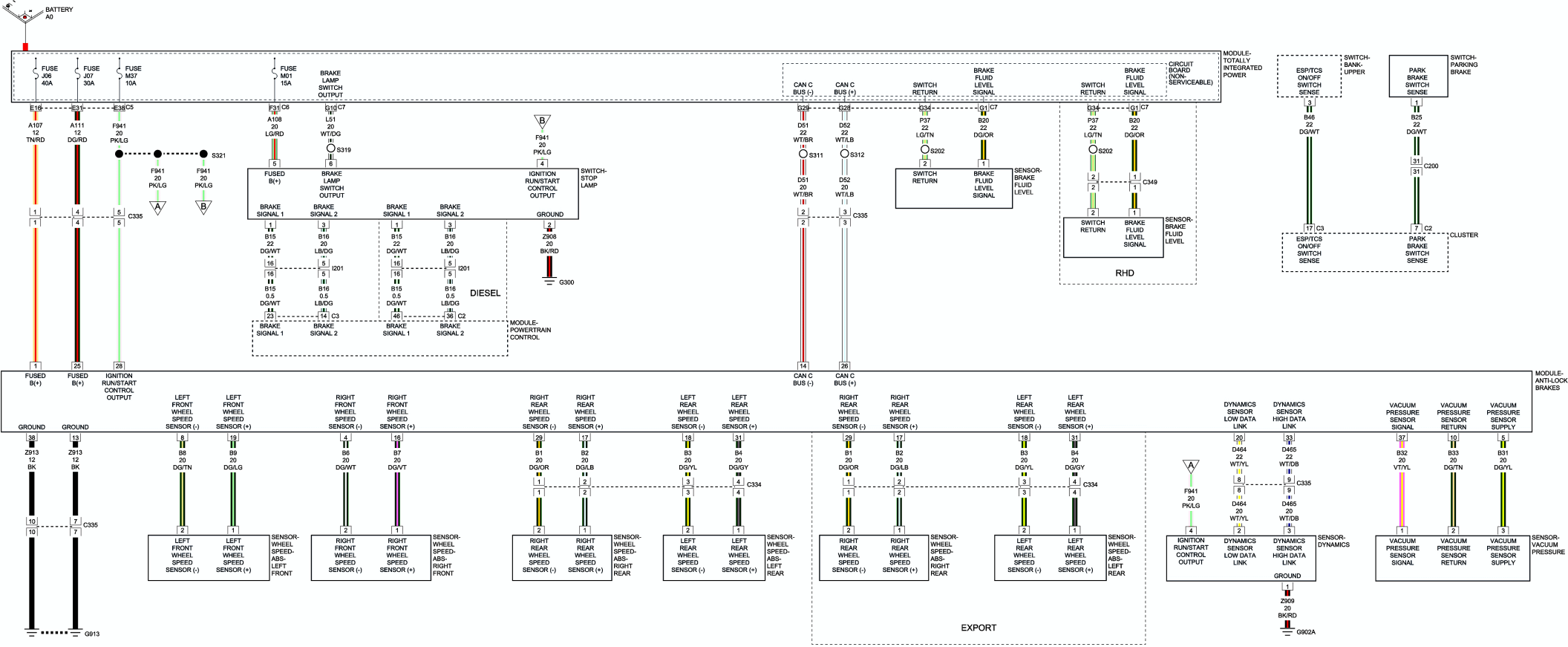
BATTERY
A0
FUSE
J06
40A
FUSE
J07
30A
FUSE
M37
10A
FUSE
M01
15A
BRAKE
LAMP
SWITCH
OUTPUT
MODULE-
TOTALLY
INTEGRATED
POWER
CIRCUIT
BOARD
(NON-
SERVICEABLE)
CAN C
BUS (-)
CAN C
BUS (+)
SWITCH
RETURN
BRAKE
FLUID
LEVEL
SIGNAL
ESP/TCS
ON/OFF
SWITCH
SENSE
SWITCH-
BANK-
UPPER
PARK
BRAKE
SWITCH
SENSE
SWITCH-
PARKING
BRAKE
FUSED
B(+)
BRAKE
LAMP
SWITCH
OUTPUT
IGNITION
RUN/START
CONTROL
OUTPUT
SWITCH-
STOP
LAMP
BRAKE
SIGNAL 1
BRAKE
SIGNAL 2
GROUND
DIESEL
MODULE-
POWERTRAIN
CONTROL
SENSOR-
BRAKE
FLUID
LEVEL
RHD
CLUSTER
MODULE-
ANTI-LOCK
BRAKES
LEFT
FRONT
WHEEL
SPEED
SENSOR (-)
LEFT
FRONT
WHEEL
SPEED
SENSOR (+)
RIGHT
FRONT
WHEEL
SPEED
SENSOR (-)
RIGHT
FRONT
WHEEL
SPEED
SENSOR (+)
RIGHT
REAR
WHEEL
SPEED
SENSOR (-)
RIGHT
REAR
WHEEL
SPEED
SENSOR (+)
LEFT
REAR
WHEEL
SPEED
SENSOR (-)
LEFT
REAR
WHEEL
SPEED
SENSOR (+)
DYNAMICS
SENSOR
LOW DATA
LINK
DYNAMICS
SENSOR
HIGH DATA
LINK
VACUUM
PRESSURE
SENSOR
SIGNAL
VACUUM
PRESSURE
SENSOR
RETURN
VACUUM
PRESSURE
SENSOR
SUPPLY
SENSOR-
WHEEL
SPEED-
ABS-
LEFT
FRONT
SENSOR-
WHEEL
SPEED-
ABS-
RIGHT
FRONT
SENSOR-
WHEEL
SPEED-
ABS-
RIGHT
REAR
SENSOR-
WHEEL
SPEED-
ABS-
LEFT
REAR
SENSOR-
DYNAMICS
SENSOR-
VACUUM
PRESSURE
EXPORT
IGNITION
RUN/START
CONTROL
OUTPUT
G913
G300
G902A