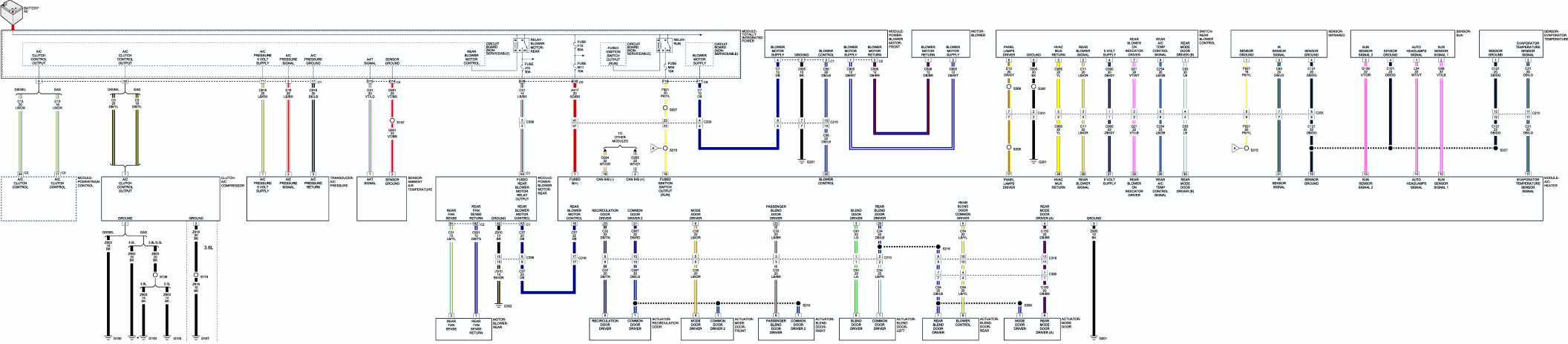

BATTERY
AC CLUTCH CONTROL OUTPUT
AC PRESSURE 5 VOLT SUPPLY
AC PRESSURE SIGNAL
AC PRESSURE GROUND
AAT SIGNAL
SENSOR GROUND
REAR BLOWER MOTOR CONTROL
CIRCUIT BOARD (NOT SERVICEABLE)
RELAY-BLOWER MOTOR-REAR
FUSE F15 10A
FUSE M11 10A
FUSED IGNITION SWITCH OUTPUT (RUN)
CIRCUIT BOARD (NOT SERVICEABLE)
RELAY-RUN
BLOWER MOTOR SUPPLY
CIRCUIT BOARD (NOT SERVICEABLE)
MODULE-TOTALLY INTEGRATED POWER
BLOWER MOTOR SUPPLY
GROUND
BLOWER CONTROL
BLOWER MOTOR RETURN
MODULE-POWER-BLOWER MOTOR-FRONT
MOTOR-BLOWER
PANEL LAMPS DRIVER
HVAC MUX RETURN
REAR BLOWER SIGNAL
5 VOLT SUPPLY
REAR BLOWER INDICATOR DRIVER
REAR AC TEMP CONTROL SIGNAL
REAR MODE DOOR DRIVER (B)
SWITCH-REAR BLOWER CONTROL
SENSOR-INFRARED
IR SENSOR SIGNAL
SENSOR GROUND
SENSOR-SUN
SUN SENSOR SIGNAL 2
AUTO HEADLAMPS SIGNAL
SUN SENSOR SIGNAL 1
SENSOR-EVAPORATOR TEMPERATURE
EVAPORATOR TEMPERATURE SENSOR SIGNAL
MODULE-HEATER
TO OTHER MODULES
CLUTCH-AC COMPRESSOR
TRANSDUCER-AC PRESSURE
SENSOR-AMBIENT AIR TEMPERATURE
MODULE-POWERTRAIN CONTROL
FUSED REAR BLOWER MOTOR RELAY OUTPUT
MODULE-POWER-BLOWER MOTOR-REAR
FUSED IN(+)
CAN BIG (-)
CAN BIG (+)
FUSED IGNITION SWITCH OUTPUT (RUN)
REAR FAN SENSE
REAR FAN SENSE RETURN
REAR BLOWER MOTOR CONTROL
RECIRCULATION DOOR DRIVER
COMMON DOOR DRIVER
MODE DOOR DRIVER
PASSENGER BLEND DOOR DRIVER
BLEND DOOR DRIVER
REAR BLEND DOOR DRIVER
REAR BLEND DOOR COMMON DRIVER
REAR MODE DOOR DRIVER (A)
GROUND
3.6L
REAR FAN SENSE
REAR FAN SENSE RETURN
MOTOR-BLOWER-REAR
RECIRCULATION DOOR DRIVER
COMMON DOOR DRIVER
ACTUATOR-RECIRCULATION DOOR
MODE DOOR DRIVER
COMMON DOOR DRIVER 2
ACTUATOR-MODE DOOR-FRONT
PASSENGER BLEND DOOR DRIVER
COMMON DOOR DRIVER 2
ACTUATOR-BLEND DOOR-RIGHT
BLEND DOOR DRIVER
COMMON DOOR DRIVER
ACTUATOR-BLEND DOOR-LEFT
REAR BLEND DOOR DRIVER
BLOWER CONTROL
ACTUATOR-BLEND DOOR-REAR
MODE DOOR DRIVER
REAR MODE DOOR DRIVER (A)
ACTUATOR-MODE DOOR